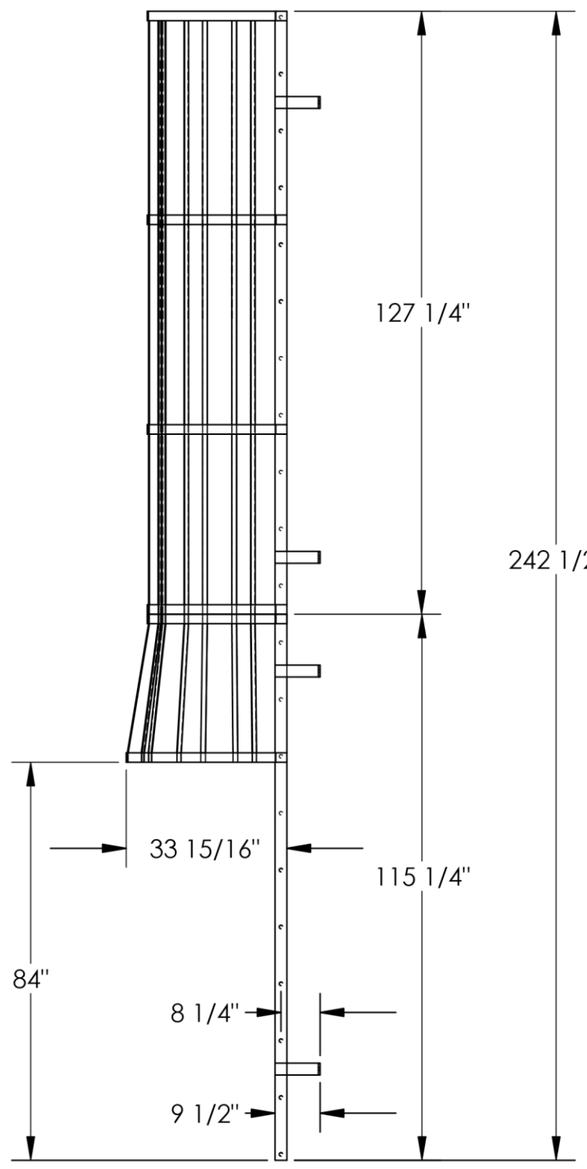

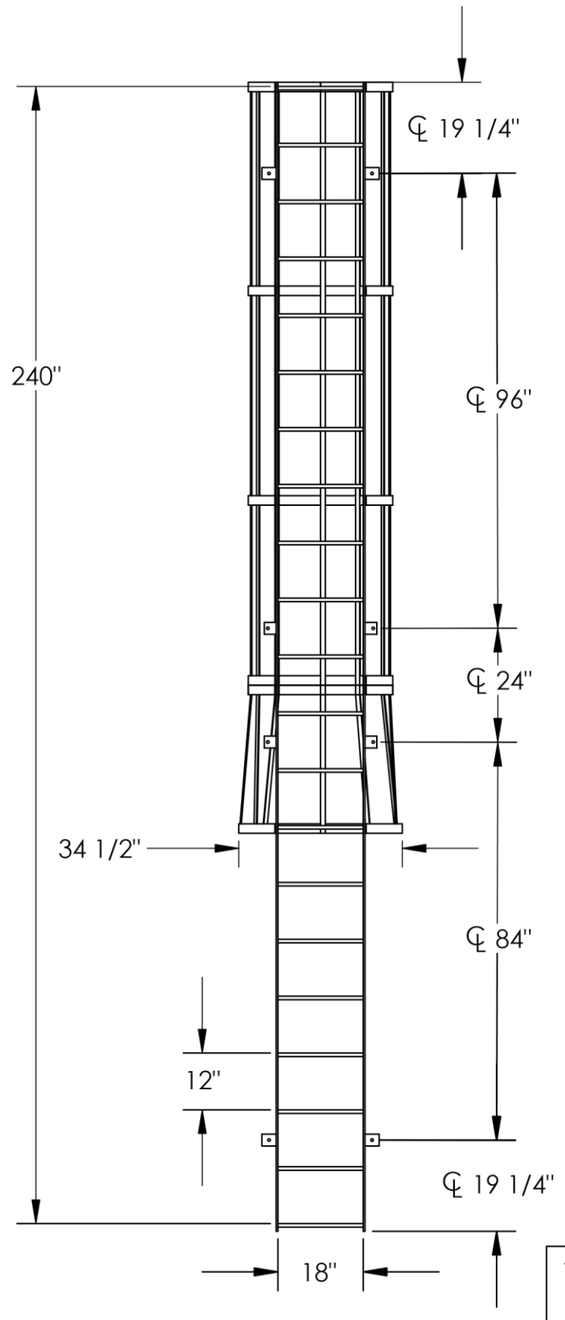

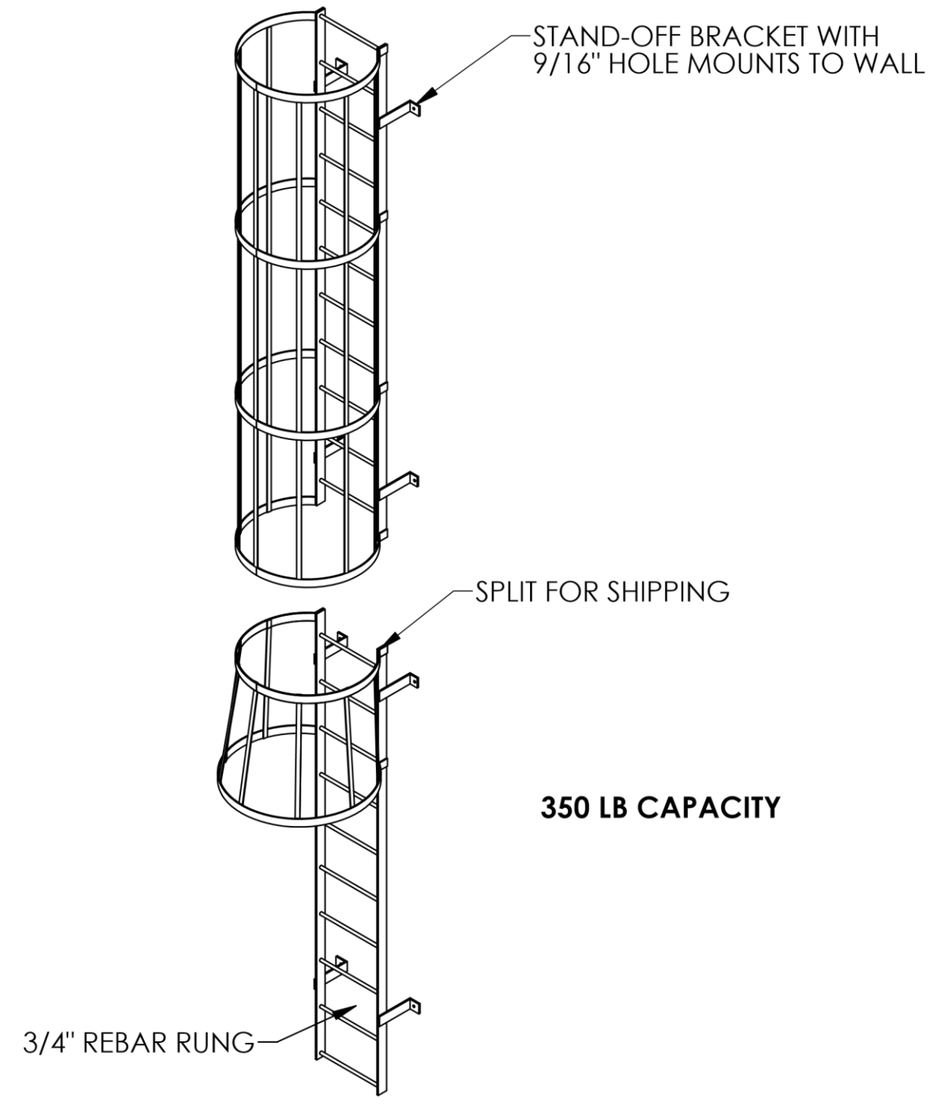

350 LB CAPACITY

APPROVAL SIGNATURE:

DATE:

TITLE: Fixed Ladder with Cage

PROPRIETARY AND CONFIDENTIAL

THE INFORMATION CONTAINED IN THIS DRAWING IS THE SOLE PROPERTY OF THE MANUFACTURER. ANY REPRODUCTION IN PART OR AS A WHOLE WITHOUT THE WRITTEN PERMISSION OF THE MANUFACTURER IS PROHIBITED.

LEAD TIME

MATERIAL: Plain Carbon Steel

FINISH: Gray

DO NOT SCALE DRAWING

DRAWN	J.A.L.	7/8/20

SIZE	DWG. NO.	REV
B	WLFC1121	02

SCALE: 1:32 | WEIGHT: 338 | SHEET 1 OF 1